● Architectural Plan(Circle set-up diagram)

AUTOMATIC DOOR

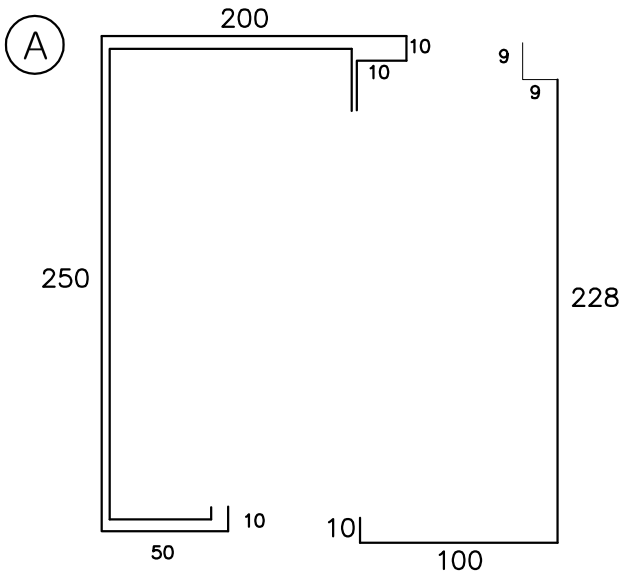

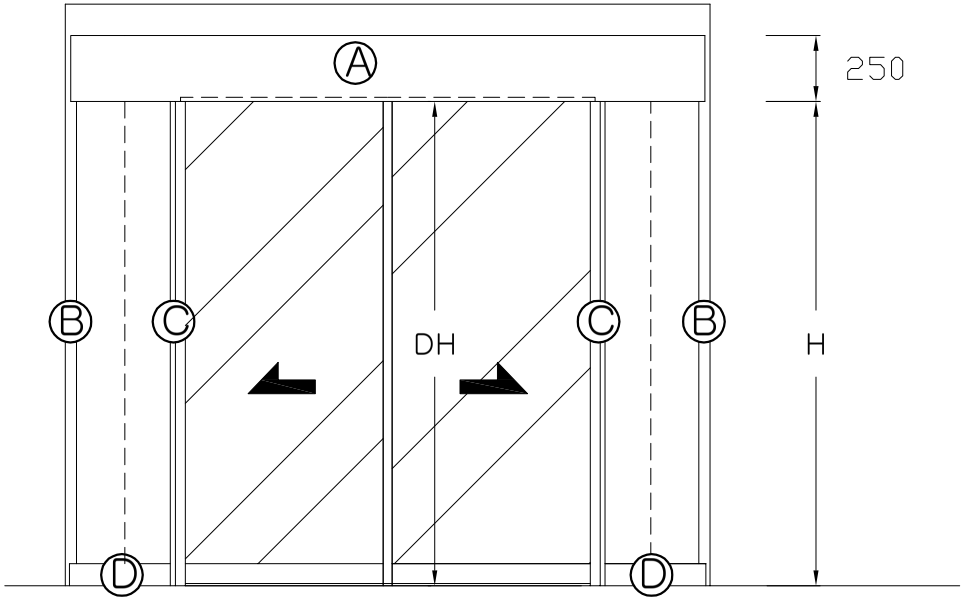

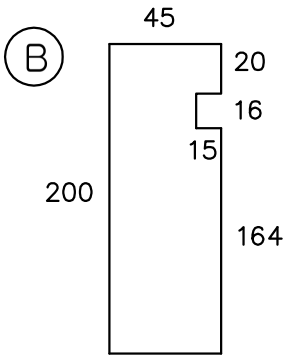

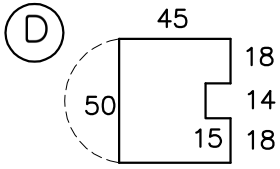

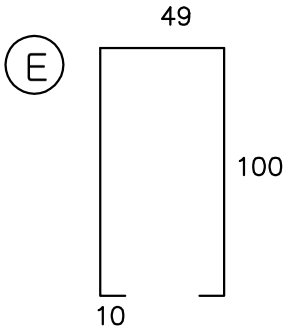

PROJECT TITLE	
AUTOMATIC DOOR	
Special note	
△	
△	
△	
Design change	
Design change	
Design change	
DATE	Approval
DATE	
Etc..	Electricity
Approval	
Design test	
Design	
Drawing	
Date of Preparation DATE . .	
SCALE	
Name of drawings	
Circle set-up diagram	
Class Number	
Drawing Number	

Woosung Auto Door Co.,Ltd.
As 86 (Seongsu-dong 2-ga), Seongdong-gu, Seoul, Korea.
TEL: 82-2-2205-1010
FAX: 82-2-2205-1020